Câble USB 2.0 WHITEFLEX Black Edition flexible + noir 30cm



Référence article ART-03
Longueur 300mm

Description du produit

Câble USB WHITEFLEX Black Edition, 30cm, noir, pour Mac/PC, cordon très flexible, diamètre seulement 3mm, Hi-Speed USB 2.0, connectique: USB à 4 broches type A (mâle) - USB à 4 broches type B (mâle)

Caractéristiques

- câble USB 2.0 Whiteflex, Black Edition
- noir & flexible
- seulement 30cm
- Ø env. 3mm
- câble de COPARTNER avec UL 2725
- 28AWG/2C + 30AWG/1P
- E119932 AWM 2725 80? 30V VW-1 COPARTNER
- USB 2.0 A mâle vers USB 2.0 B mâle
- USB 2.0 High Speed
- pour 480 MBit/s (high speed), 12 MBit/s (full speed) et 1.5 MBit/s (low speed)
- RoHS: qui

Autres images

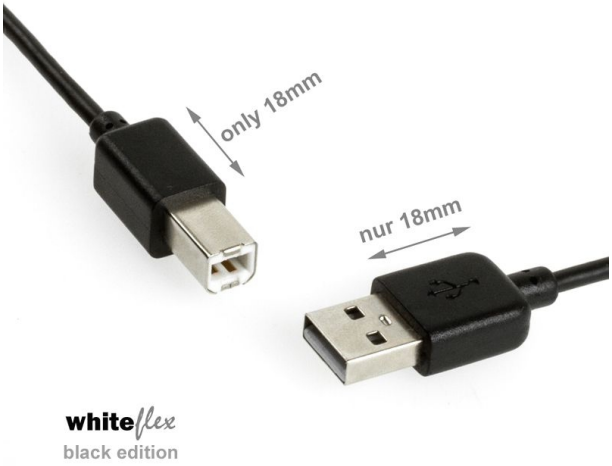



SPECIFICATION: | 1P*30AWG +2C*28AWG+AL.Mylar +Braid

ITEM		SPECIFICATION	
CONDUCTOR	AWG	30AWG	28AWG
	MATERIAL	TINNED COPPER	TINNED COPPER
	COND.SIZE	7/0.10 ± 0.008㎜	7/0.127 ± 0.008㎜
INSULATION	MIN.AVG.THICK	0.15㎜	0.10㎜
	MATERIAL	HD-PE	SR-PVC LOW TOXIC
	O . D	0.66 ± 0.05㎜	0.60 ± 0.05㎜
	N O.	1P	2C
DRAIN	AWG	\	
	MATERIAL	\	
	SIZE	\	
Face Outside AL.MYLAR	COVERAGE	100%	
	OVERLAP	25% MIN	
BRAID COPPER	MATERIAL	TINNED COPPER	
	SIZE	16 *4/0.10± 0.008㎜	
JACKET	MIN.AVG.THICK	0.23㎜	
	MATERIAL	HALF MATT PVC	
	COLOUR	UL813 BLACK	
	O . D	3.00 ± 0.15 ㎜	

ELECTRICAL CHARACTERISTICS

1. Rating : TEMP 80℃; VOLTAGE 30V
2. Conductor Resistance: at 20℃MAX
   30AWG 376.96Ω/km ;28AWG 237.25Ω/km
3. Insulation Resistance: 10MΩ-km min at 20℃dc 500V
4. Dielectric Strength; AC 500V/1minute

COLOUR CODE:

2C*28AWG: 1.RED 2.BLACK
1P*30AWG: GREEN*WHITE

PHYSICAL PROPERTIES OF JACKET

1. Flexibility test: NO CRACKING
2. Flame test: PASS VW-1

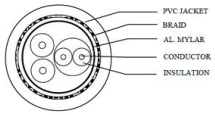

E119932 AWM 2725 80 30V VW-1 COPARTNER

COPARTNER

(c) COPARTNER WIRE & CABLE (SHENZHEN) MFG CO., LTD.

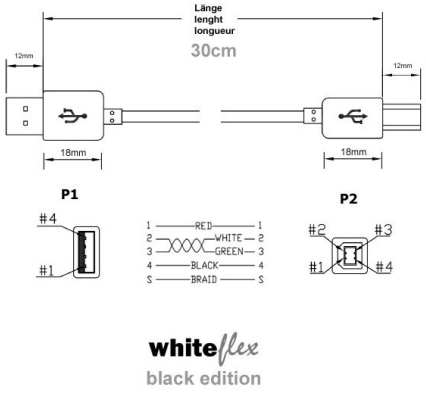

whiteflex
black edition

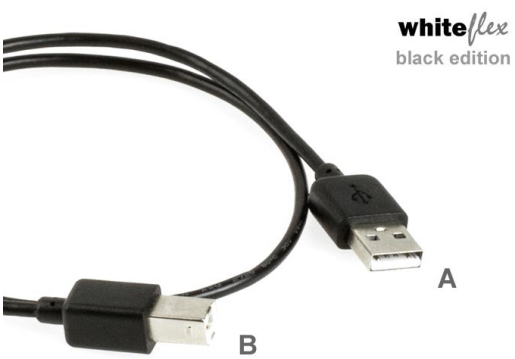
whiteflex
black edition
A
B


whiteflex
black edition